REVISIONS			
LTR	DESCRIPTION	DATE	APPROVED

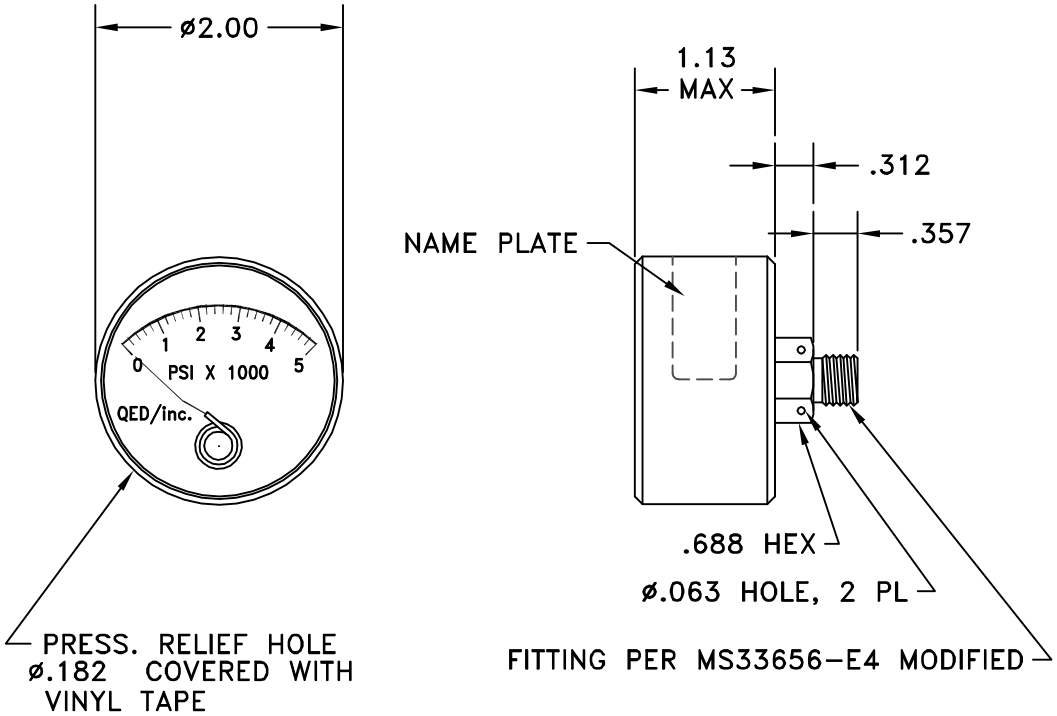

SPECIFICATIONS

1. ACCURACY: ±2% OF FULL SCALE
2. PROOF PRESSURE: 7000 PSI
3. DIAL MARKINGS: BLACK CHARACTERS ON A CLEAR ANODIZED BACKGROUND, 200 PSI INCREMENTS.

MATERIALS

1. CASE: ALUMINUM ALLOY
2. FITTING: 303 CRES.
3. BOURDON TUBE: INCONEL 750X
4. CRYSTAL: ACRYLIC

DESIGN CRITERIA

1. BURST PRESSURE: 16000 PSI, MINIMUM

THIS DOCUMENT IS THE PROPERTY OF QED/INC. AND IS CONVEYED WITH THE EXPRESS CONDITION THAT IT AND THE INFORMATION CONTAINED IN IT ARE NOT TO BE USED, DISCLOSED, OR REPRODUCED IN WHOLE OR IN PART, FOR ANY PURPOSE WITHOUT THE EXPRESS WRITTEN CONSENT OF QED/INC., AND THAT NO RIGHT IS GRANTED TO DISCLOSE OR SO USE ANY INFORMATION CONTAINED IN SAID DOCUMENT. THIS DOCUMENT MAY CONTAIN INFORMATION SUBJECT TO THE ITAR OR THE EAR. THIS INFORMATION MAY NOT BE EXPORTED, RELEASED, OR DISCLOSED TO FOREIGN NATIONALS OR NON-U.S. PERSONS WITHOUT FIRST COMPLYING WITH THE EXPORT RQUIREMENTS OF THE ITAR AND EAR.

NEXT ASSY	USED ON

APPLICATION

ITEM	QTY	DESCRIPTION	IDENT	PART NUMBER	REMARKS

LIST OF MATERIALS

UNLESS OTHERWISE SPECIFIED
DIMENSIONS ARE IN INCHES
DECIMALS FRACTIONS
.X ± ±
.XX ± .03 ANGLES
.XXX± .010 ± 1°

MATL:

FINISH

SIGNATURES	DATE
BY	2/01
CKD	
ENGR	
APPD	

QED/inc. 2920 SOUTH HALLADAY STREET SANTA ANA, CALIFORNIA 92705

TITLE
PRESSURE GAUGE

SIZE	CODE IDENT NO.	DWG NO.
B	24708	2000 SERIES TYPE BF2

SCALE FULL WT. SHEET 1 OF 1

PDF created with FinePrint pdfFactory trial version www.pdffactory.com